econ®

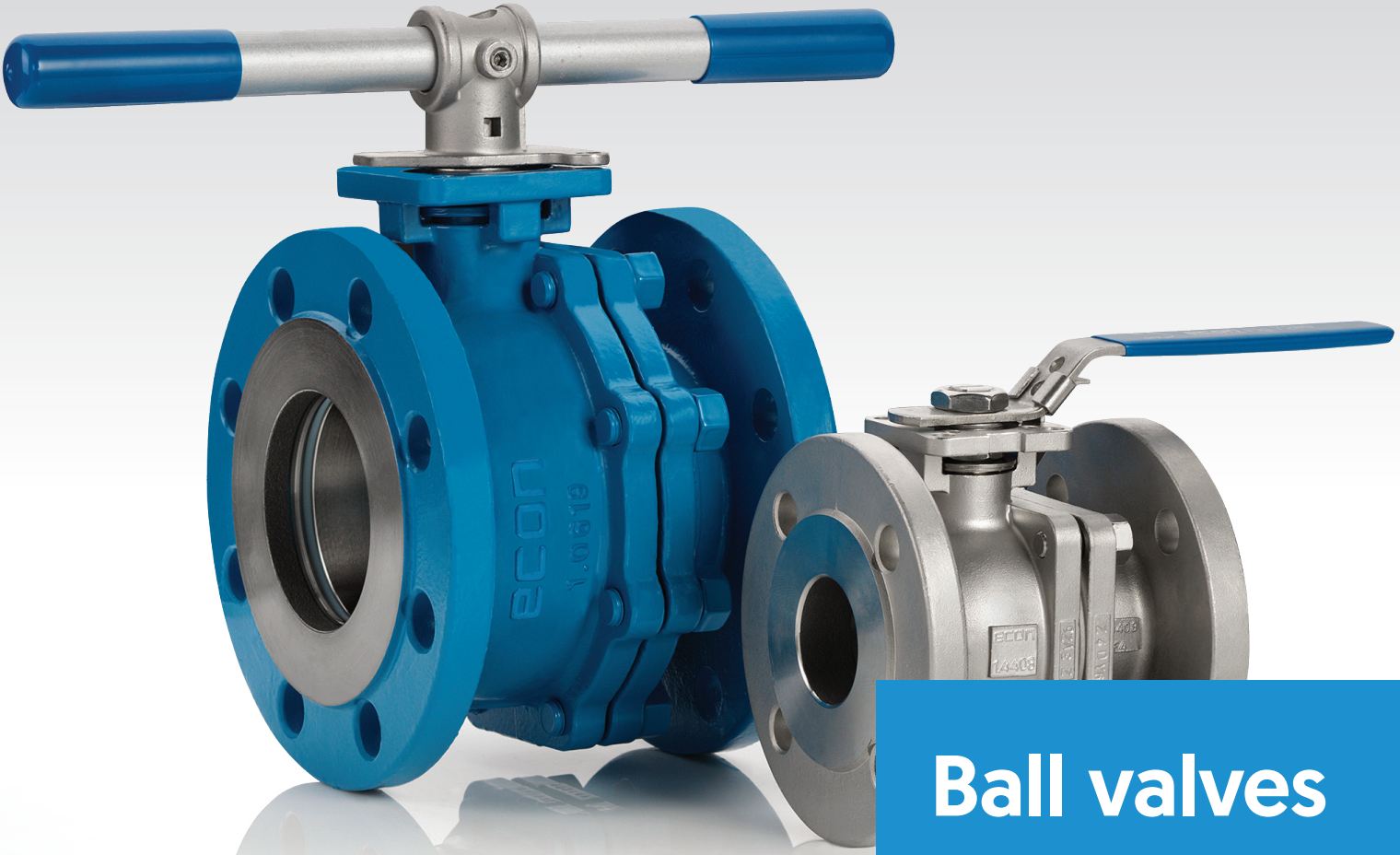

Ball valves

Flanged 2-piece

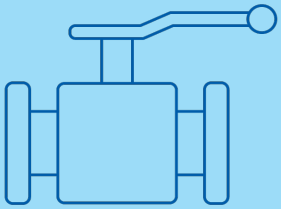

econ®

Ball valves | flanged 2-piece

Ball Valves take a leading role in the valve industry. The scope of applications is enormous and due to the quarter-turn construction they are easy to operate and require almost no maintenance. Moreover full bore Ball Valves are ideal for conditions which require maximum flow capacity with minimum pressure drop.

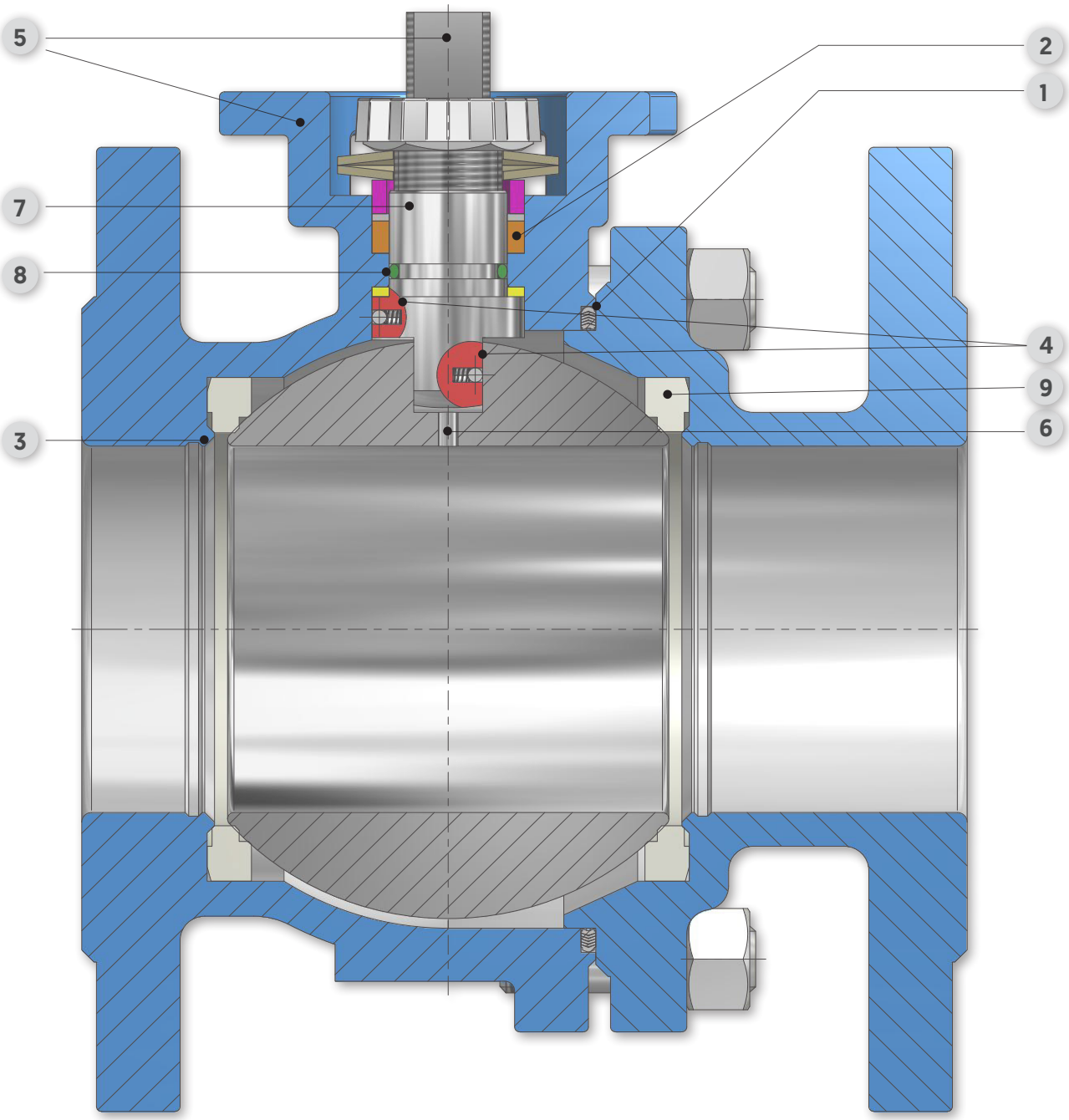

Besides these advantages, all Econ® two-piece flanged full bore Ball Valves are fire-safe and fugitive emission certified. The standard ISO Direct Mount feature enables easy installation of any actuator, even after initial start-up in a manual configuration. Finally, the Econ® brand ensures reliability and an excellent price quality ratio.

Construction
These Ball Valves have a two piece construction and have a solid full bore ball.

Materials
Carbon steel (1.0619/ASTM A216 WCB) and stainless steel (1.4408/ASTM A351 CF8M) are the materials which form the standard supply. Other materials can be supplied upon request.

Fire-Safe 1 2 3
These Ball Valves are fire-safe certified according to API 607 7th Edition and ISO 10497: 2010. In the event of fire, a secondary metallic seat **(3)** prevents leakage through the valve port. A graphite stem seal **(2)** and a graphite spiral wound **(1)** body gasket with PTFE inner layer ensures tightness through the stem packing and body joints.

Gland Packing 2
Two Belleville spring washers ensure optimal sealing performance, also compensating for changing process conditions. Advantages of this feature are an increased operational safety and less maintenance. In accordance with fire-safe requirements, the packing material is made of Graphite. In order to comply with the very strict emission requirements for ISO 15848-1 and TA-Luft certification, a FKM O-ring has been placed.

Anti-static and ATEX 4
The ball-stem connection and the stem-body connection have an anti-static feature, which ensures electrical continuity between those parts. Therefore a static charge on the ball, which could be formed by flowing media, will be diverted to earth through the piping system. Manual operated ball valves are not in the scope of ATEX and therefor are not allowed to be marked as such.

Direct Mount 5
A Direct Mount top-flange according to ISO 5211 is standard for all sizes. This feature makes it possible to mount an actuator without the need of a mounting bracket and drive coupler. This results into a considerable cost reduction, compact automated unit and a higher level of safety for operators.

Ball 6
The highly polished solid ball has a pressure relief hole in the stem slot in order to avoid pressure build-up in the body cavity. This ensures a tight shutoff and long service life.

Stem 7
The valve stem assembly has a blow-out proof construction and a square top connection. A PTFE thrust washer seal helps to achieve a low operating torque.

Fugitive emission 8
By utilising a primary PTFE stem seal/thrust washer, a secondary FPM (FKM) O-ring and a tertiary spring loaded graphite gland packing, these valves comply with the very strict emission requirements as defined in ISO 15848-1 and TA-Luft/VDI 2440/VDI 3479.

Performance class:
ISO FE BH-CO1-t(RT to +200°C)-Class 300-ISO 15848-1 and
ISO FE CH-CO3-t(RT to +200°C)-Class 300-ISO 15848-1

The product meets the requirements for leakage measurement defined in Section 5.2.6.4. of the TA-Luft standard.

Seats 9
A flexible seat design provides tight shut-off at high and low pressures. The special seat construction limits wear to a minimum and ensures low torque values under all operating conditions. Standard seat material is a high grade PTFE TFM 1600. Besides the proven mechanical and chemical properties of PTFE, this chemical reinforced version offers suitability for a wider range of applications in respect to pressure and temperature. Optional TFM 4215 can be selected. This is also a modified PTFE compound, which is reinforced with 25% carbon. This seat material extends the valves pressure-temperature range.

Testing
The Ball Valves are 100% tight and are tested in accordance with API 598 (ASME) or EN 12266-1 (DIN).

SIL
SIL is an international standard (IEC 61508) and is short for "Safety Integrity Level". Econ® ball valves are suitable for SIL 2 applications.

EC 1935 - Food contact materials
All parts of the stainless steel valves, that will come into contact with foodstuff have been migration tested by an external laboratory and do fully comply with the EC 1935 regulations.

Face to face length
The DIN Ball Valves have a face to face dimension in accordance with EN 558, table 27 (short pattern) and table 1 (long pattern). ASME Valves in accordance with B16.10 long pattern.

Flanges
The flanges are in accordance with EN 1092-1 (DIN version) or ASME B16.5 RF (ASME version). Flange facings have a surface finish of Ra 3.2 - 6.3.

Nace
On request the stainless steel and also carbon steel valves can be supplied according to NACE MR 0175/ISO 15156.

Finish
Castings have a high quality finish (minimum MSS SP112, level 2). Carbon steel Ball Valves have a primer and high solids Epoxy top coat (RAL 5015). Total paint thickness is 60-80 µm.

Operation
Standard ball valves are supplied with a SS304 handlever (DN15 - DN80) or a T-bar (DN100 - DN150). DN200 valves are supplied with a bare shaft and can be equiped with a gear box upon request. All handlevers are lockable in open and closed position. In case extra security is required a padlock should be fitted to lock the valve in the open or closed position. As an option a heavy duty lever can be supplied for the DN15-DN80 valves.

Options
- **TFM 4215 seats (also other materials available)**
- **Heavy duty lever DN15-DN80**
- **Gearbox for all sizes**
- **Extended stem to allow pipe insulation**
- **Spring return lever**
- **Limit switches for remote open/close notification**
- **Pneumatic actuator**
- **Electric actuator**
- **Hydraulic actuator**
- **Electro-hydraulic actuator**

Material and test certificates
All Econ® flanged Ball Valves can be supplied with a EN 10204-3.1 material and test certificate. All body castings are poured by a Lloyd's, Bureau Veritas and DNV approved foundry.

econ®

Ball valves | flanged 2-piece

Fig. 7249 - Fig. 7289
Fig. 7248 - Fig. 7288

DIN PN16/40 | DN15-200

- Econ® 2-piece full bore Ball Valves
- Carbon steel (Fig. 7248/7249) and Stainless steel (Fig. 7288/7289)
- Flange connections EN 1092-1
- Pressure rating DIN PN16/40
- DN15-200
- Design EN 12516-1
- Face to face length EN 558, table 27 (short) or EN 558, table 1 (long)
- ISO 5211 Direct Mount
- API 607 7th Edition and ISO 10497: 2010 Fire-Safe certified
- Fugitive emission tested according to ISO 15848-1 and TA-Luft/VDI 2440/VDI 3479
- Anti-static design
- IEC 61508, SIL 2 capable

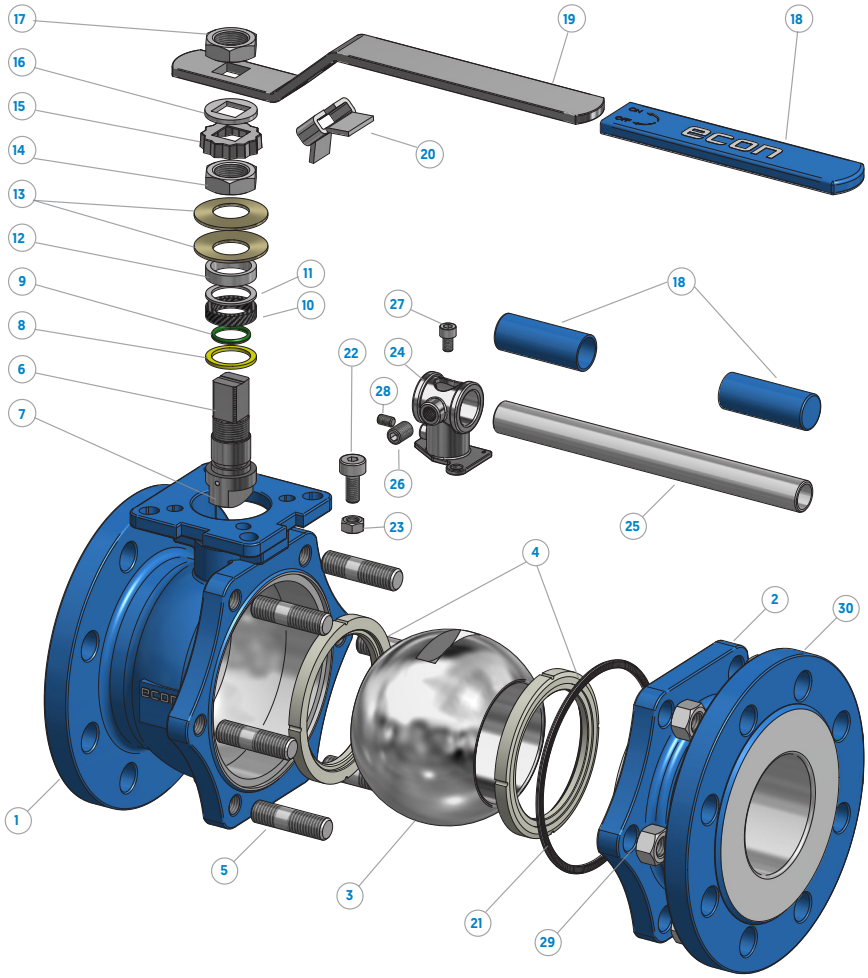

Remarks:
- *DN 15 - 80 with hand lever*
- *DN 100 - 150 with T-bar*
- *Standard spare part kit consists of pos. No.: 4, 8, 9 , 10, 11 and 21*
- *DN 200 is without operator. On request a gearbox can be supplied*
- *Fig. 7248 carbon steel long pattern - EN 558, table 1*
- *Fig. 7288 stainless steel long pattern - EN 558, table 1*

Pos	Name	Material (Carbon steel)	Material (Stainless steel)
1	Body	1.0619	1.4408
2	Body end	1.0619	1.4408
3	Ball	1.4308 [1]	1.4408
4	Seat ring	PTFE (TFM1600)	PTFE (TFM1600)
5	Stud	A 193-B7 (1.7225)	A 193-B8 (1.4301)
6	Stem	1.4301 [1]	1.4401
7	Anti-static device	1.4301	1.4401
8	Thrust washer seal	PTFE	PTFE
9	O-ring	FKM (Viton®) [2]	FKM (Viton®) [2]
10	Glandpacking	Graphite	Graphite
11	Bushing	1.4301	1.4301
12	Gland	1.4401	1.4401
13	Belleville washer	1.4310	1.4310
14	Nut	1.4301 (A 194-8)	1.4301 (A 194-8)
15	Locking cap	1.4301	1.4301

Pos	Name	Material (Carbon steel)	Material (Stainless steel)
16	Ring	1.4301	1.4301
17	Nut	1.4301 (A194-8)	1.4301 (A 194-8)
18	Sleeve	Plastic	Plastic
19	Hand lever	1.4301	1.4301
20	Locking device	1.4301	1.4301
21	Body gasket	1.4404+Graphite+PTFE [3]	1.4404+Graphite+PTFE [3]
22	Socket head screw	1.4301 (A193-B8)	1.4301 (A 193-B8)
23	Nut	1.4301 (A194-8)	1.4301 (A 194-8)
24	T-bar support	1.4308	1.4308
25	T-bar [4]	St. A53 [5]	St. A53 [5]
26	Allen set screw	1.4301 (A193-B8)	1.4301 (A 193-B8)
27	Socket head screw	1.4301 (A193-B8)	1.4301 (A 193-B8)
28	Allen set screw	1.4301 (A193-B8)	1.4301 (A 193-B8)
29	Nut	A 194-2H (1.0503)	A 194-8 (1.4301)
30	Name plate	1.4301	1.4301

1) Upon request also available with 1.4408 ball and 1.4401 stem *2) DN125 and larger: 2x O-ring* *3) Spiral wound* *4) DN100- 150* *5) Zinc plated*

Pressure/temperature rating

Body rating

PN 40 | PN 16

Seat rating

DN 15 - 25 | DN 80 - 100
DN 32 - 65 | DN 125 - 200

TFM 1600 Seat

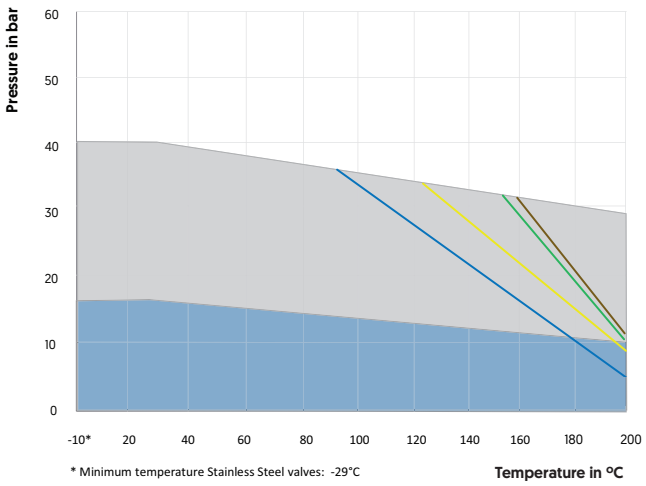

TFM 4215 Seat

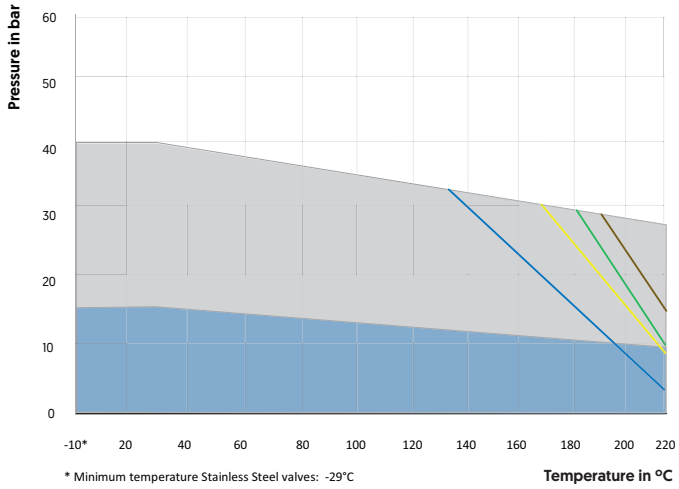

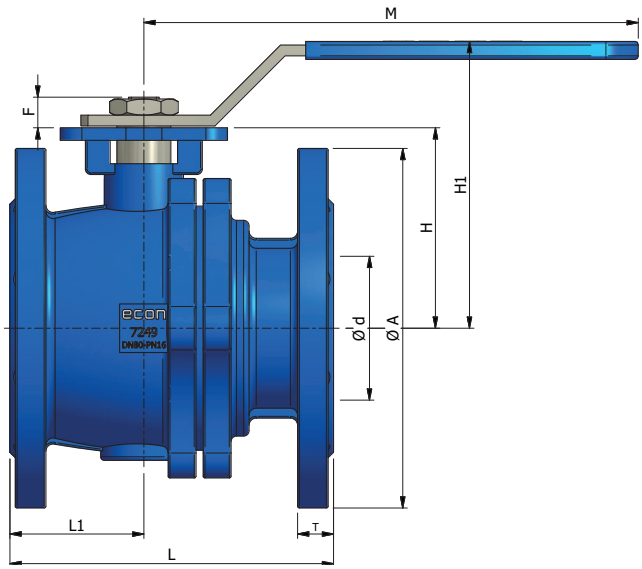

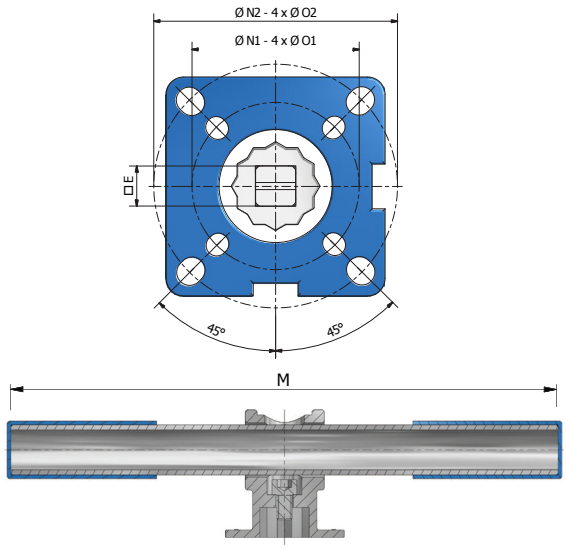

DN 100-150 | with T-bar

DN	ØD	ØA	ØA	□E	F	H	H	H1	H1	L	L	L1	L1	M	ØN1 x ØO1	ØN2 x ØO2	T	T	KG	KG
		PN16	PN40			PN16	PN40	PN16	PN40	Short Pattern	Long Pattern	PN16	PN40				PN16	PN40	PN16	PN40
15	15	95	95	9	9	48	48	78	78	115	130	50	50	145	36x6	42x6	16	16	2,4	2,4
20	20	105	105	9	9	53	53	84	84	120	150	54	54	145	36x6	42x6	18	18	3,2	3,2
25	25	115	115	11	11	59	59	90	90	125	160	56	56	175	42x6	50x7	18	18	4,2	4,2
32	32	140	140	11	11	71	71	102	102	130	180	58	58	175	42x6	50x7	18	18	5,5	5,5
40	38	150	150	14	14	76	76	110	110	140	200	58	58	190	50x7	70x9	18	18	6,9	6,9
50	50	165	165	14	14	85	85	118	118	150	230	63	63	190	50x7	70x9	20	20	9,5	9,5
65	63	185	185	17	17	102	107	150	155	170	290	69	64	265	70x9	102x11	18	22	13,8	13,8
80	76	200	200	17	17	112	117	176	181	180	310	75	70	300	70x9	102x11	20	24	17,7	17,8
100	100	220	235	22	22	140	140	210	210	190	350	83	78	400	-	102x11	20	24	25,2	30,5
125	125	250	270	27	27	183	183	263	263	325	400	153	160	600	-	125x14	22	26	60	62,5
150	150	285	300	27	27	204	204	284	284	350	480	162	176	800	-	125x14	22	28	71,8	73,8
200	200	340	375	36	36	253	253	-	-	400	600	191	221	-	-	140x18	24	34	127	152

econ®

Ball valves | flanged 2-piece

Fig. 7245
Fig. 7285

ASME class 150 | 1/2" - 8"

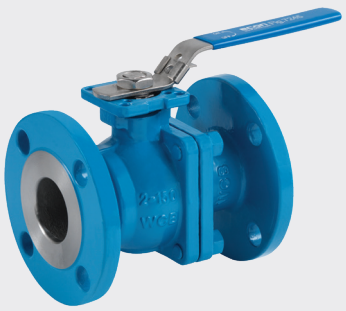

- Econ® 2-piece full bore Ball Valves
- Carbon steel (Fig. 7245) and Stainless steel (Fig. 7285)
- Flange connections ASME B16.5 RF
- Pressure rating ASME class 150
- NPS 1/2" - 8"
- Design ASME B16.34
- Face to face length ASME B16.10 long pattern
- ISO 5211 Direct Mount
- API 607 7th Edition and ISO 10497: 2010 Fire-Safe certified
- Fugitive emission tested according to ISO 15848-1 and TA-Luft/VDI 2440/VDI 3479
- Anti-static design
- IEC 61508, SIL 2 capable

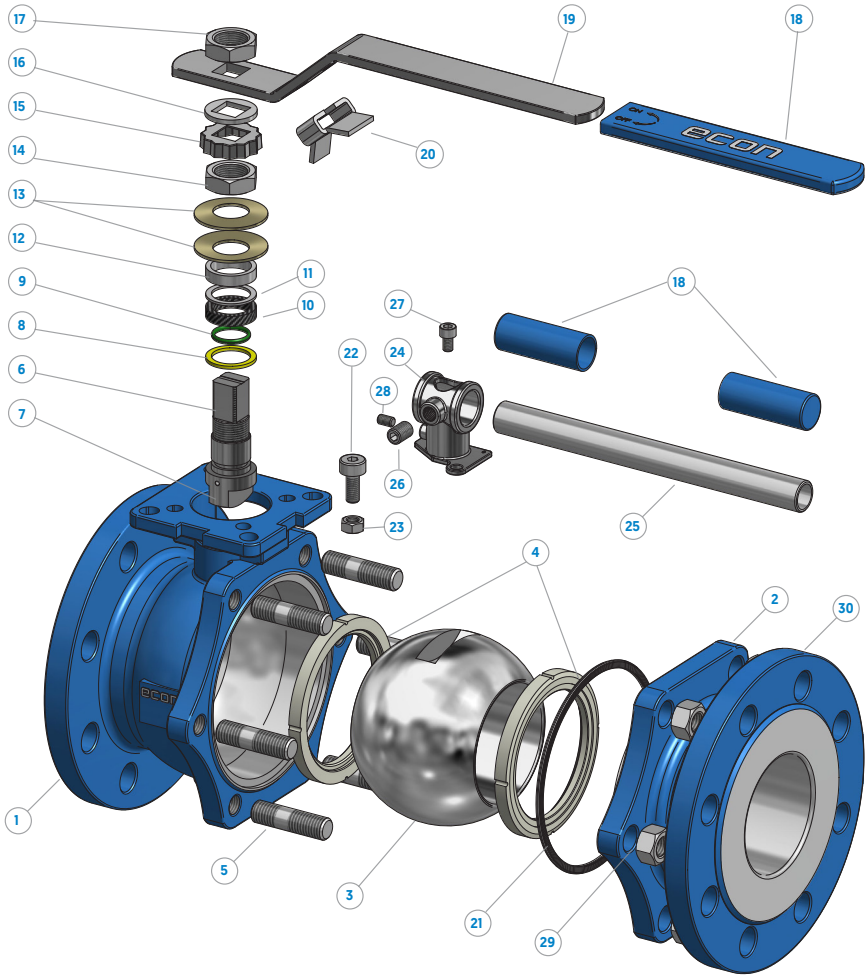

Remarks:
- *Sizes 1/2"- 3" with hand lever*
- *Sizes 4"- 6" with T-bar*
- *Standard spare part kit consists of pas. No.: 4, 8, 9, 10, 11 and 21*
- *Size 8" is without operator. On request a gearbox can be supplied*

Pos	Name	Material (Carbon steel)	Material (Stainless steel)
1	Body	A216-WCB	A351-CF8M
2	Body end	A216-WCB	A351-CF8M
3	Ball	A351-CF8M [1]	A351-CF8M
4	Seat ring	PTFE (TFM1600)	PTFE (TFM1600)
5	Stud	A193-B7	A193-B8
6	Stem	A276-316 [1]	A276-316
7	Anti-static device	AISI 304	AISI 316
8	Thrust washer	PTFE	PTFE
9	O-ring	FKM (Viton®) [2]	FKM (Viton®) [2]
10	Glandpacking	Graphite	Graphite
11	Bushing	AISI 304	AISI 304
12	Gland	AISI 316	AISI 316
13	Belleville washer	AISI 301	AISI 301
14	Nut	A194-8	A194-8
15	Locking cap	AISI 304	AISI 304

Pos	Name	Material (Carbon steel)	Material (Stainless steel)
16	Ring	AISI 304	AISI 304
17	Nut	A194-8	A194-8
18	Sleeve	Plastic	Plastic
19	Hand lever	AISI 304	AISI 304
20	Locking device	AISI 304	AISI 304
21	Body gasket	AISI 316L+Graphite+PTFE [3]	AISI 316L+Graphite+PTFE [3]
22	Socket head screw	A193-B8	A193-B8
23	Nut	A194-8	A194-8
24	T-bar support	A351-CF8	A351-CF8
25	T-bar [4]	St. A53 [5]	St. A53 [5]
26	Allen set screw	1.4301 (A193-B8)	1.4301 (A 193-B8)
27	Socket head screw	1.4301 (A193-B8)	1.4301 (A 193-B8)
28	Allen set screw	1.4301 (A193-B8)	1.4301 (A 193-B8)
29	Nut	A194-2H	A194-8
30	Name plate	AISI 304	AISI 304

1] Upon request also available with A351-CF8 ball and A276-304 stem *2] 5" and larger: 2x O-ring* *3] Spiral wound* *4] 4"- 6"* *5] Zinc plated*

Pressure/temperature rating

Body rating

#150

Seat rating

½" - 1"
1 ½" - 2"
3" - 4"
6" - 8"

TFM 1600 Seat

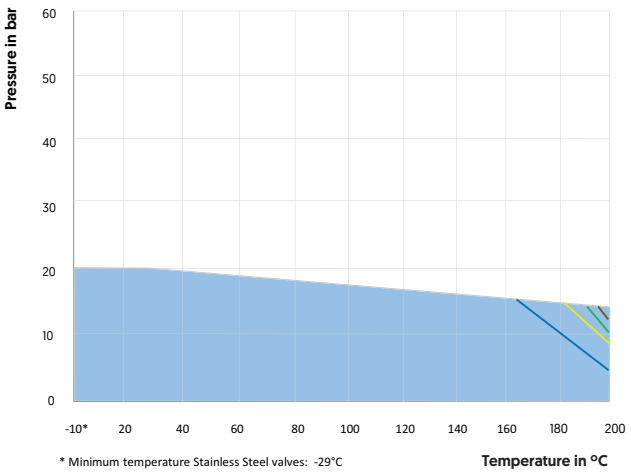

* Minimum temperature Stainless Steel valves: -29°C

TFM 4215 Seat

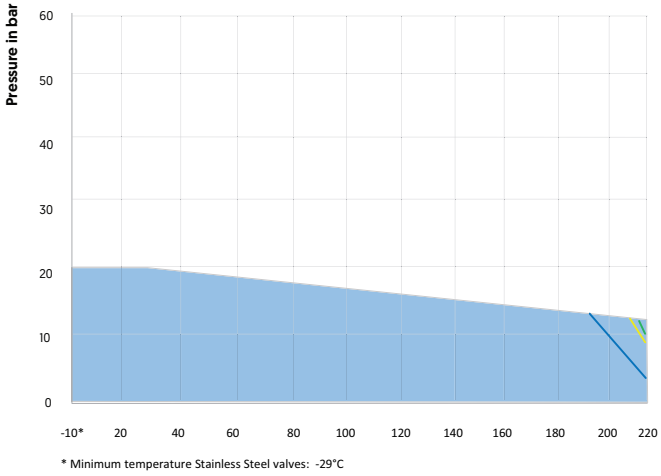

* Minimum temperature Stainless Steel valves: -29°C

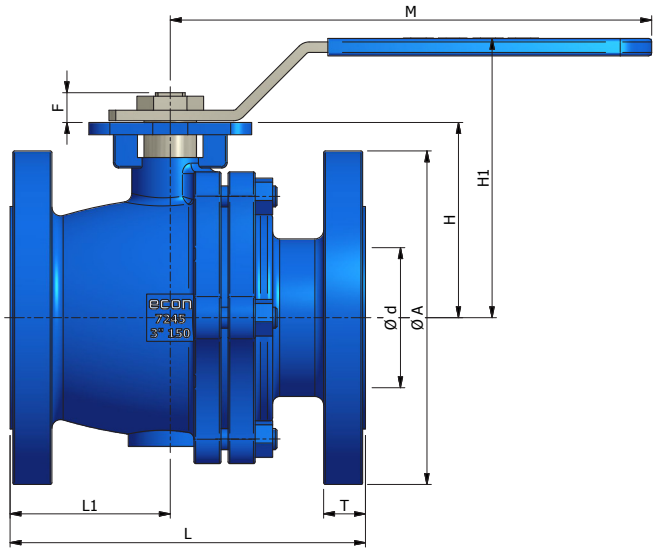

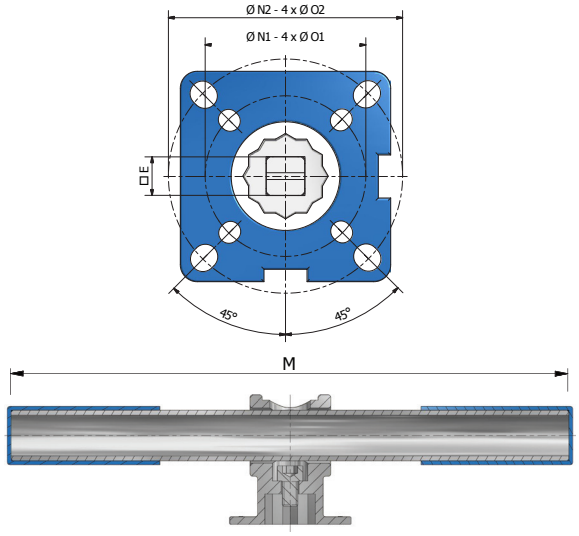

4" - 6" | with T-bar

DN	ØD	ØA	□E	F	H	H1	L	L1	M	ØN1 x ØO1	ØN2 x ØO2	T	KG
½"	15	90	9	9	49	79	108	46	145	36x6	42x6	8	1,7
¾"	20	100	9	11	53	84	117	50	145	36x6	50x7	8,9	2,2
1"	25	110	11	11	58	90	127	54	175	42x6	50x7	9,6	2,9
1½"	38	130	14	14	76	110	165	64	190	50x7	70x9	12,7	5,9
2"	50	150	14	17	82	115	178	78	190	50x7	70x9	14,3	8,4
3"	76	190	17	22	112	160	203	92	265	70x9	102x11	17,5	17,8
4"	100	230	22	27	140	211	229	108	400	-	102x11	22,3	30,5
6"	150	280	27	27	204	284	394	162	800	-	125x14	23,9	72
8"	200	345	36	36	253	-	457	191	-	-	140x18	27	131,4

econ®

Ball valves | flanged 2-piece

Fig. 7257
Fig. 7297

ASME class 300 | 1/2" - 8"

- Econ® 2-piece full bore Ball Valves
- Carbon steel (Fig. 7257) and Stainless steel (Fig. 7297)
- Flange connections ASME B16.5 RF
- Pressure rating ASME class 300
- NPS 1/2" - 8"
- Design ASME B16.34
- Face to face length ASME B16.10 long pattern
- ISO 5211 Direct mount
- API 607 7th Edition and ISO 10497: 2010 Fire-Safe certified
- Fugitive emission tested according to ISO 15848-1 and TA-Luft/VDI 2440/VDI 3479
- Anti-static design
- IEC 61508, SIL 2 capable

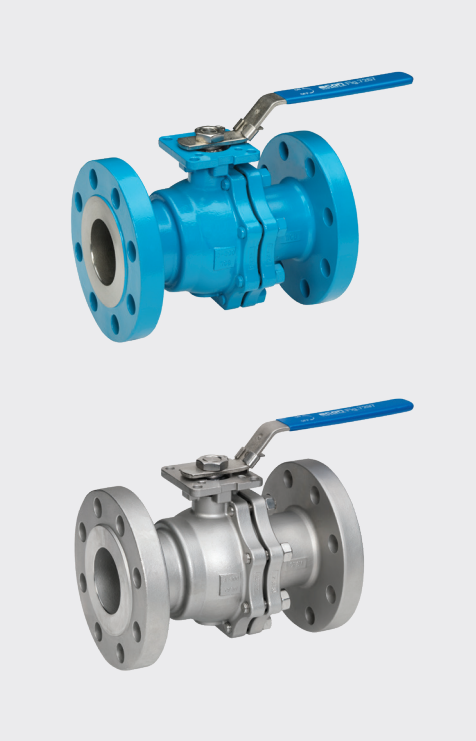

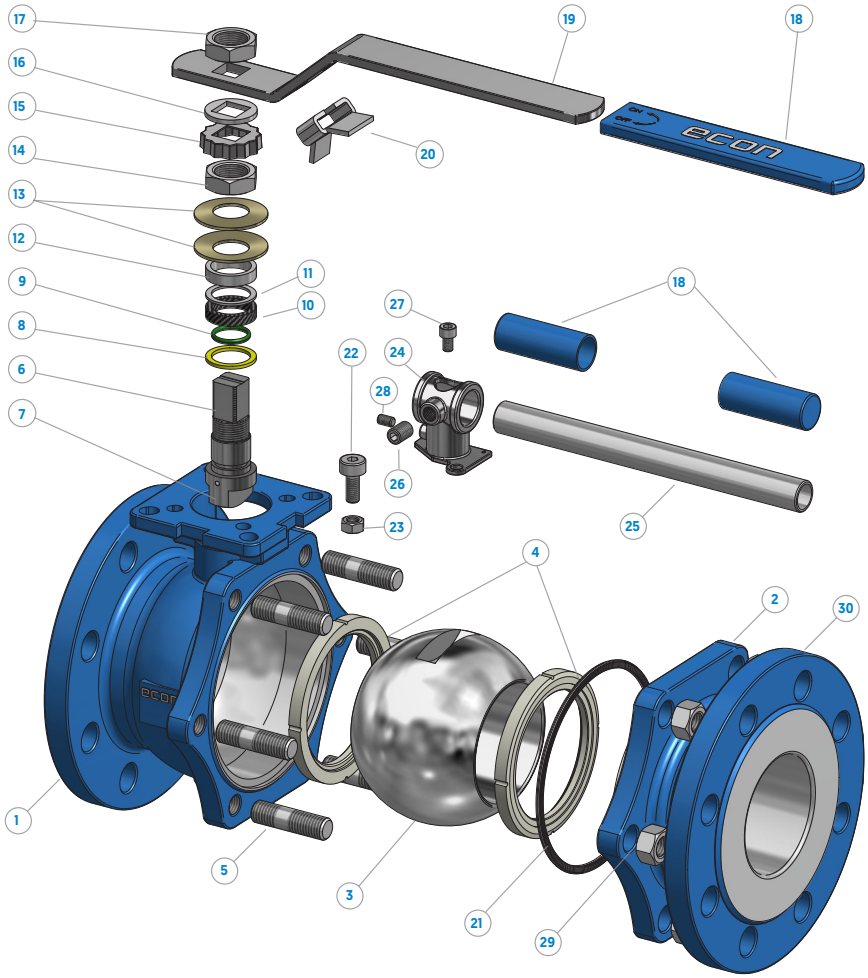

Remarks:
- *Sizes 1/2"- 3" with hand lever*
- *Sizes 4"- 6" with T-bar*
- *Standard spare part kit consists of pas. No.: 4, 8, 9, 10, 11 and 21*
- *Size 8" is without operator. On request a gearbox can be supplied*

Pos	Name	Material (Carbon steel)	Material (Stainless steel)
1	Body	A216-WCB	A351-CF8M
2	Body end	A216-WCB	A351-CF8M
3	Ball	A351-CF8M [1]	A351-CF8M
4	Seat ring	PTFE (TFM1600)	PTFE (TFM1600)
5	Stud	A193-B7	A193-B8
6	Stem	A276-316 [1]	A276-316
7	Anti-static device	AISI 304	AISI 316
8	Thrust washer seal	PTFE	PTFE
9	O-ring	FKM (Viton®) [2]	FKM (Viton®) [2]
10	Glandpacking	Graphite	Graphite
11	Bushing	AISI 304	AISI 304
12	Gland	AISI 316	AISI 316
13	Belleville washer	AISI 301	AISI 301
14	Nut	A194-8	A194-8
15	Locking cap	AISI 304	AISI 304

Pos	Name	Material (Carbon steel)	Material (Stainless steel)
16	Ring	AISI 304	AISI 304
17	Nut	A194-8	A194-8
18	Sleeve	Plastic	Plastic
19	Hand lever	AISI 304	AISI 304
20	Locking device	AISI 304	AISI 304
21	Body gasket	AISI 316L+Graphite+PTFE [3]	AISI 316L+Graphite+PTFE [3]
22	Socket head screw	A193-B8	A193-B8
23	Nut	A194-8	A194-8
24	T-bar support	A351-CF8	A351-CF8
25	T-bar [4]	St. A53 [5]	St. A53 [5]
26	Allen set screw	1.4301 (A193-B8)	1.4301 (A193-B8)
27	Socket head screw	1.4301 (A193-B8)	1.4301 (A193-B8)
28	Allen set screw	1.4301 (A193-B8)	1.4301 (A193-B8)
29	Nut	A194-2H	A194-8
30	Name plate	AISI 304	AISI 304

1) Upon request also available with A351-CF8 ball and A276-304 stem *2) 5" and larger: 2x O-ring* *3) Spiral wound* *4) 4"- 6"* *5) Zinc plated*

Pressure/temperature rating

Body rating

Carbon steel | Stainless steel

Seat rating

½" - 1" | 3" - 4"
1 ½" - 2" | 6" - 8"

TFM 1600 Seat

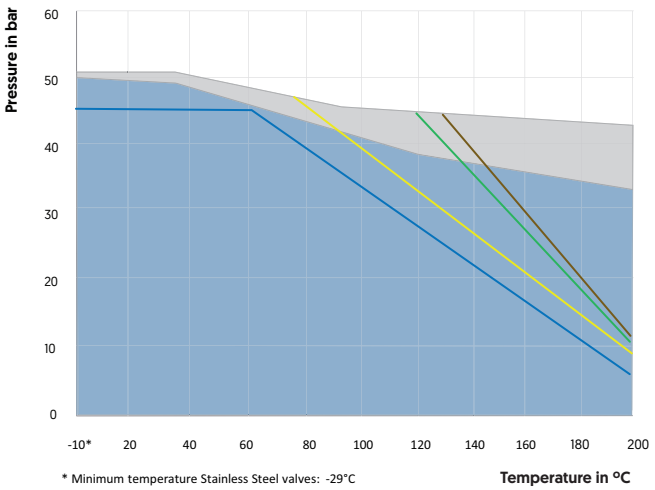

TFM 4215 Seat

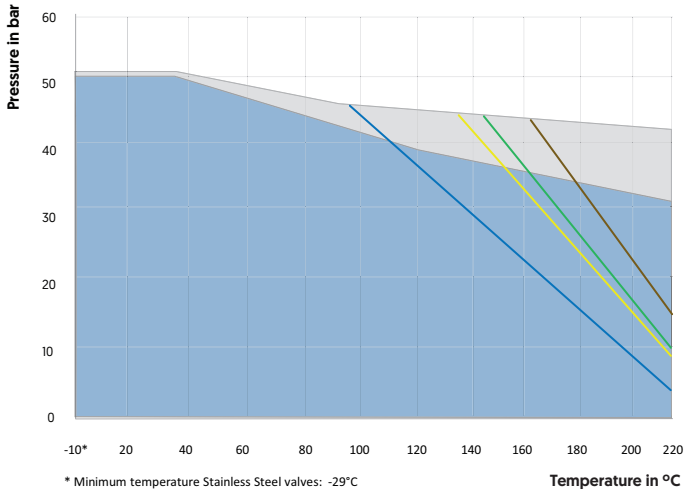

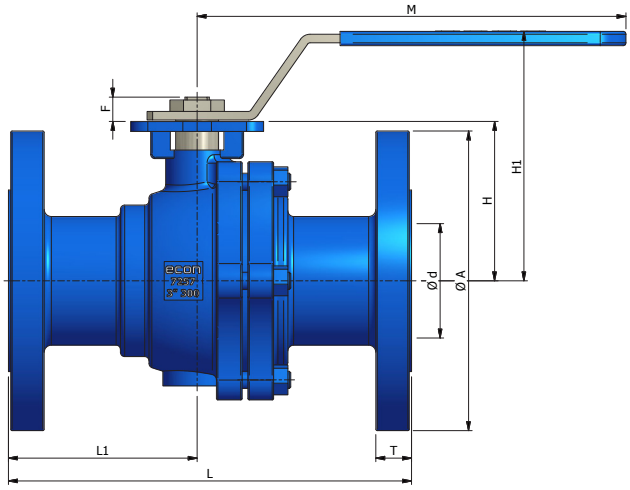

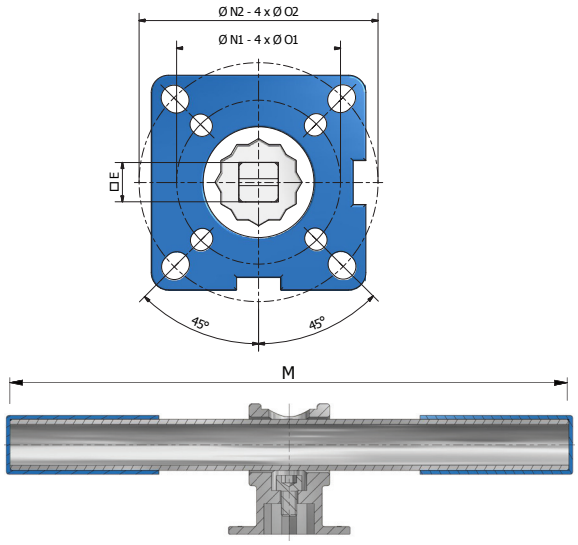

4" - 6" | met T-sleutel

DN	ØD	ØA	□E	F	H	H1	L	L1	M	ØN1 x ØO1	ØN2 x ØO2	T	KG
½"	15	95	9	9	48,8	79	140	62	145	36x6	42x6	14,7	2,4
¾"	20	115	9	9	58,5	89	152	68	145	36x6	42x6	16,3	3,2
1"	25	125	11	11	63,5	94,5	165	73	175	42x6	50x7	17,9	4,2
1½"	38	155	14	14	79,5	110	190	77	190	50x7	70x9	21,1	6,9
2"	50	165	14	14	84,5	115	216	97	190	50x7	70x9	22,7	9,5
3"	76	210	17	17	111,5	176	282	132	300	70x9	102x11	29	18,5
4"	100	225	22	22	140	204	305	146	400	-	102x11	32,2	35
6"	150	320	27	27	203	275	403	174	800	-	125x14	37	74
8"	200	381	36	36	252,5	328	502	218	800	-	140x18	41,7	171

Valve operating torques

In order to make the correct selection of a pneumatic, electric or hydraulic actuator for operating the valve, the below table needs to be used. Depending on the application and type of media a safety factor must be added to the valve torque. An indication of these factors are being mentioned further down this page. For additional safety it's being recommended that the actuator will not supply more torque than the maximum allowable stem torque (MAST). Please contact your Econ® distributor if assistance is needed for selecting the correct actuator.

BTO (Nm)						MAST
Valve size		△P (bar)				Stem material 1.4301, 1.4401 or A276-316 at 20°C
DN	NPS	16	40	20 (class 150)	51 (class 300)	
DN15	1/2"	5	5	5	5	15
DN20	3/4"	6	6	6	6	15
DN25	1"	10	11	10,5	11	36
DN32	1.1/4"	14	17	15	17	36
DN40	1.1/2"	21	23	22	24	91
DN50	2"	30	34	32	35	91
DN65	2.1/2"	47	53	49	54	161
DN80	3"	77	87	81	90	297
DN100	4"	117	131	122	135	348
DN125	5"	230	272	245	285	645
DN150	6"	328	500	340	550	1.063
DN200	8"	466	650	487	800	1.550

Basic principles for actuator sizing:

- **BTO: Break Torque to Open for valves with TFM 1600 seat rings.**
- **For TFM 4215 seats a factor of 1,3 must be applied to the above torque values**
- **Torque values are based on aqueous liquids (water).**
- **Solid particles and fouling of the ball and seats will lead to higher torques and accelerated wear.**
- **Safety factors for actuator sizing according to the table below:**

Medium/Application	Safety factor for open-close service
Aqueous liquids (water)	1,3
Lubricating media (oils)	0,8
Sludges	2
Dry gases	1,5
Dirty gases, natural gas and LPG	2
Oxygen, Chlorine, Hydrogen and cryogenic applications	1,5
Modulating applications for aqueous liquids	1,5

Flow data for ON-OFF and V-port valves

Flow data of isolating valves is usually needed for pipe dimension and pressure loss calculations, when the valve is in the fully open position. Open-close isolating valves are mostly in the fully open position and therefore these valves should have a high flow coefficient value to reduce pressure drops, which results in increasing plant efficiency and reduction of energy costs.

K_{vs} and C_{vs} values for ON-OFF ball valves in the fully open position

DN	NPS	K_{vs}	C_{vs}
15	1/2"	15	18
20	3/4"	31	36
25	1"	41	48
32	1.1/4"	62	72
40	1.1/2"	103	120
50	2"	163	190

DN	NPS	K_{vs}	C_{vs}
65	2.1/2"	386	440
80	3"	514	600
100	4"	943	1.100
125	5"	1.458	1700
150	6"	2.228	2.600
200	8"	3.599	4.200

K_v and C_v values for V-port control ball valves

Standard Econ® ball valves can be easily turned into control valves by replacing the standard ball by a 30°, 60° or 90° V-port ball. Control ball valves are more compact, have a lower weight and are much less expensive than comparably sized globe valves. V-port ball valves also offer bi-directional bubble-tight shutoff with zero leakage. Designed with flexibility in process conditions in mind, the Kv/Cv and control characteristics are easily changed by simply changing the ball.

Traditional control system

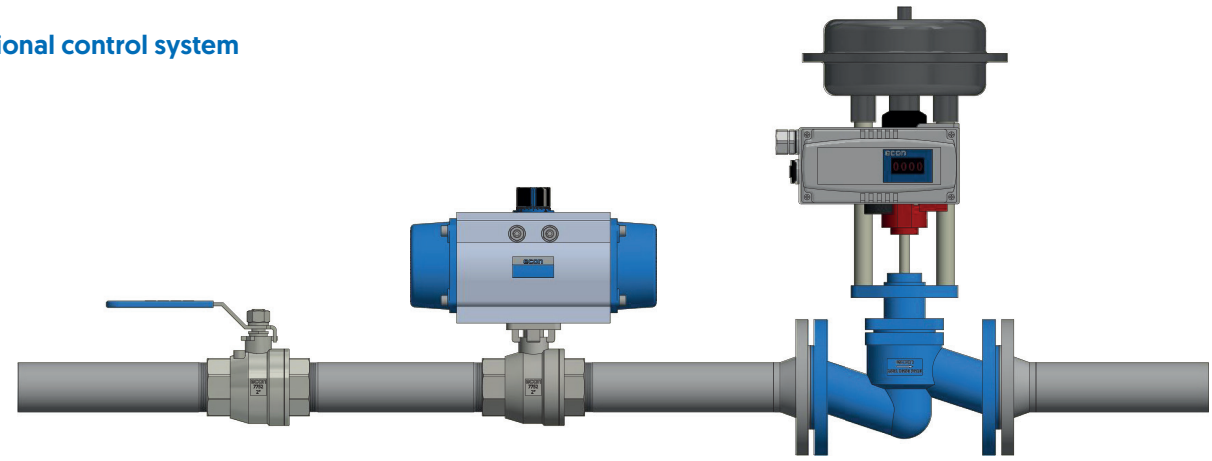

Econ V-port control system

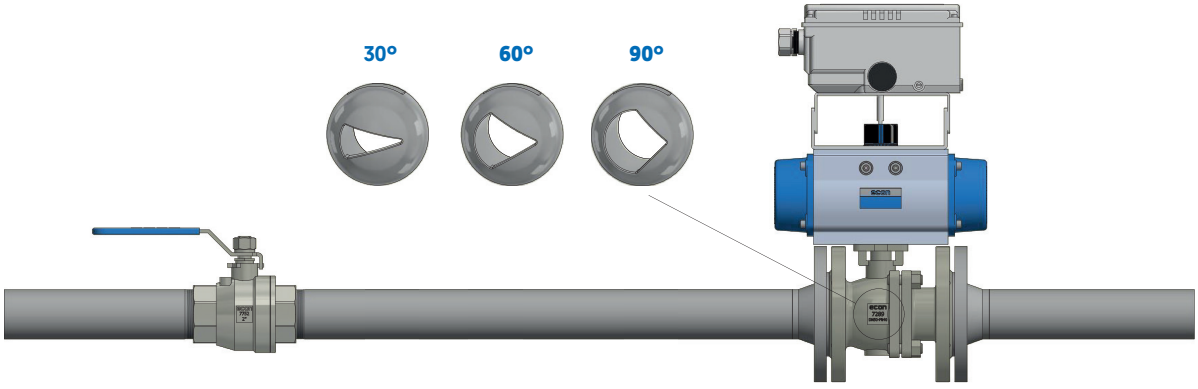

Ball valves | flanged 2-piece

V-port control ball valves can either be operated by a control lever, Econ® electro-pneumatic double acting or spring return actuator or an Econ® modulating electric actuator.

V-port ball valve with electro-pneumatic modulating actuator

V-port ball valve with electric modulating actuator

In order to select the right valve for the application, please make sure your selection meets below requirements:

- **Select a nominal valve size from the Kv (Cv) table below, based on the calculated Kv (Cv)-value.**
- **Make sure the calculated Kv (Cv)-value is between the 30% and 90% opening angle of the valve.**
- **If the calculated Kv (Cv)-value is below 30% of the opening angle, the lifetime of the valve seats will be reduced.**
- **The maximum cp must not exceed 14 bar (218 psi)**
- **A Δp higher than 5 bar (73 psi) will cause noise due to high medium velocity.**
- **If the valve needs to be automated, please select an Econ® pneumatic or electric actuator and include a safety factor of at least 1,5 (for aqueous liquids). (The actuator must supply 50% more torque than the valve operating torque). This will increase the actuators lifetime and ensures fluent positioning.**

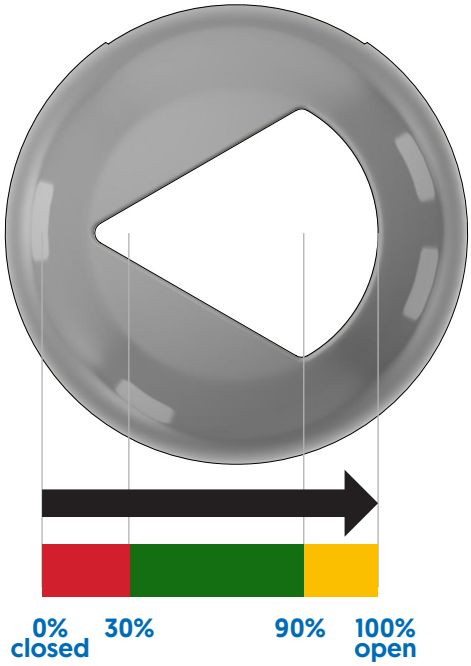

DN	NPS	V-port	0%		10%		20%		30%		40%		50%		60%		70%		80%		90%		100%	
			K_v	C_v	K_v	C_v	K_v	C_v	K_v	C_v	K_v	C_v	K_v	C_v	K_v	C_v	K_v	C_v	K_v	C_v	K_v	C_v	K_{vs}	C_{vs}
15	1/2"	30°	0,0	0,0	0,0	0,0	0,0	0,0	0,1	0,2	0,4	0,5	0,7	0,8	1,2	1,4	1,7	1,9	2,6	3,0	3,6	4,2	4,8	5,5
		60°	0,0	0,0	0,0	0,0	0,0	0,0	0,2	0,3	0,7	0,8	1,2	1,3	2,0	2,3	2,8	3,3	4,5	5,2	6,2	7,2	8,1	9,4
20	3/4"	30°	0,0	0,0	0,0	0,0	0,0	0,0	0,2	0,3	0,7	0,8	1,1	1,3	2,0	2,3	2,8	3,3	4,4	5,1	6,1	7,1	8,0	9,3
		60°	0,0	0,0	0,0	0,0	0,0	0,0	0,4	0,5	1,1	1,3	1,9	2,2	3,3	3,9	4,8	5,5	7,5	8,7	10,4	12,0	13,6	15,7
25	1"	30°	0,0	0,0	0,0	0,0	0,0	0,0	0,4	0,4	1,0	1,2	1,8	2,0	3,0	3,5	4,4	5,0	6,8	7,9	9,5	10,9	12,4	14,3
		60°	0,0	0,0	0,0	0,0	0,0	0,0	0,5	0,6	1,4	1,6	2,4	2,8	4,4	5,1	6,1	7,1	11,3	13,0	15,1	17,5	21,0	24,3
32	1.1/4"	30°	0,0	0,0	0,0	0,0	0,0	0,0	0,4	0,5	1,1	1,3	2,2	2,5	3,6	4,1	5,1	5,9	7,0	8,1	9,7	11,3	13,4	15,5
		60°	0,0	0,0	0,0	0,0	0,0	0,0	0,9	1,0	2,4	2,8	3,8	4,4	6,0	6,9	9,2	10,6	12,4	14,3	17,1	19,8	22,6	26,1
40	1.1/2"	30°	0,0	0,0	0,0	0,0	0,0	0,0	0,8	1,0	2,0	2,3	3,5	4,1	5,7	6,6	8,5	9,8	11,9	13,7	16,5	19,1	20,6	23,9
		60°	0,0	0,0	0,0	0,0	0,0	0,1	1,1	1,2	2,9	3,4	5,4	6,3	8,8	10,2	13,7	15,8	20,4	23,6	30,1	34,8	39,6	45,8
50	2"	30°	0,0	0,0	0,0	0,0	1,0	1,2	2,0	2,3	4,9	5,7	8,5	9,8	13,2	15,3	19,9	23,0	27,8	32,1	36,4	42,1	36,5	42,2
		60°	0,0	0,0	0,0	0,1	1,3	1,5	2,4	2,8	6,0	6,9	10,4	12,1	17,0	19,6	27,1	31,4	41,0	47,4	61,3	70,8	70,2	81,1
65	2.1/2"	30°	0,0	0,0	0,0	0,0	1,2	1,4	3,3	3,8	6,6	7,7	11,3	13,1	17,0	19,7	24,7	28,5	34,5	39,9	47,7	55,1	58,4	67,5
		60°	0,0	0,0	0,0	0,1	1,5	1,8	3,7	4,3	8,4	9,7	14,7	17,0	23,4	27,0	36,1	41,7	55,1	63,7	82,0	94,8	102,6	118,6
80	3"	30°	0,0	0,0	0,0	0,0	1,6	1,9	5,3	6,1	10,4	12,0	17,7	20,5	27,0	31,2	38,9	45,0	53,4	61,8	73,3	84,8	89,8	103,8
		60°	0,0	0,0	0,1	0,1	1,9	2,2	7,0	8,1	15,0	17,3	25,9	29,9	41,3	47,7	63,3	73,2	92,4	106,9	136,3	157,6	164,7	190,4
100	4"	30°	0,0	0,0	0,0	0,0	3,7	4,2	9,6	11,1	18,6	21,6	31,4	36,3	48,4	56,0	70,7	81,8	98,5	113,9	136,6	157,9	152,4	176,2
		60°	0,0	0,0	0,1	0,1	4,9	5,6	13,0	15,0	25,8	29,9	44,2	51,1	71,8	83,0	115,0	133,0	183,8	212,5	294,9	340,9	347,5	401,7
125	5"	30°	0,0	0,0	0,0	0,0	4,0	4,6	10,7	12,3	20,4	23,6	37,1	42,9	68,1	78,7	95,7	110,6	119,9	138,6	145,3	167,9	227,9	263,4
		60°	0,0	0,0	0,1	0,1	5,1	5,8	16,0	18,6	29,3	33,8	55,5	64,2	92,9	107,4	122,1	141,2	189,4	219,0	411,4	475,7	481,3	556,4
150	6"	30°	0,0	0,0	0,0	0,1	3,8	4,4	15,0	17,4	34,0	39,3	60,7	70,1	93,5	108,2	138,4	160,0	196,2	226,8	260,7	301,3	334,8	387,1
		60°	0,0	0,0	0,1	0,1	5,6	6,5	23,1	26,7	54,1	62,6	97,3	112,5	158,5	183,2	250,6	289,7	378,2	437,3	566,3	654,7	676,8	782,4
200	8"	30°	0,0	0,0	10,4	12,0	22,5	26,0	45,8	53,0	81,3	94,0	122,8	142,0	176,5	204,0	242,2	280,0	311,4	360,0	409,1	473,0	480,1	555,0
		60°	0,0	0,0	11,2	13,0	26,0	30,0	61,4	71,0	134,1	155,0	202,4	234,0	288,9	334,0	416,9	482,0	601,2	695,0	834,7	965,0	1.075,2	1.243,0

Notes:

- **Kv is the volume of water at 20°C in m³ per hour at a ΔP of 1 bar.**
- **Cv is the volume of water at 60°F in US Gallons per minute at a ΔP of 1 psi.**
- **Kvs is the Kv-value in the fully open position.**
- **Cvs is the Cv-value in the fully open position**
- **0%: Valve is in the fully closed position.**
- **100%: Valve is in the fully open position.**

Characterized control

These curves of standard ports are general guidelines and are not specific to any particular valve size.

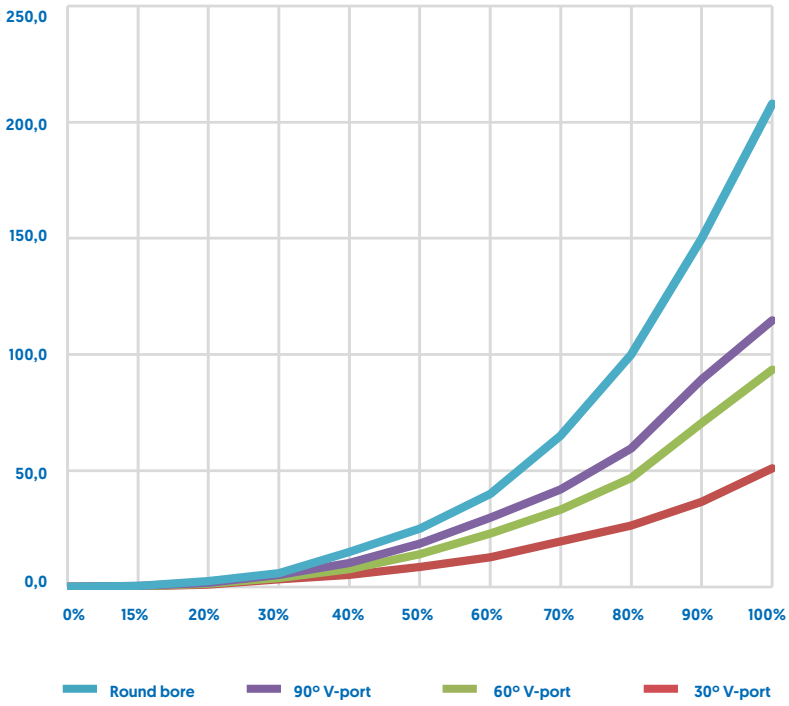

Ball Valve Accessories

Fig. 8007
Stem extensions are used for low and high temperature applications. In these cases the stem extensions will form a barrier between the valve and the lever or actuator. This way the operator or actuator is protected against the low or high temperature that the valve might reach. Also insulated pipe systems require valves with a stem extension in order to elevate the actuator above the insulation. The stem extensions have a direct mount top flange, which is identical to the top flange of the ball valves themselves. All actuators with an ISO 5211 and parallel square connection can be mounted directly on these stem extensions. Extension height: 100mm up to size DN100 (4") and 120mm for size DN125 (5") up to DN200 (8").

Fig. 6001B
Heavy duty lockable lever. Made of stainless steel cast material for the most demanding applications.

Fig. 6001D
Oval lockable lever for valves up to DN50 / 2". Made for narrow spaces in which a standard lever cannot be operated. Made of stainless steel.

Options

Gearbox

- Visual open/close indicator
- Mechanical end stops open/close
- ISO 5211 mounting flange
- Also available with switch box

Extended stem

- Suitable for insulation purposes
- Height: 100mm or 120mm (DN125/5" - DN200/8")
- Can be equiped with a pneumatic, electric or hydraulic actuator

Spring return lever

- For 'fail safe' situations
- Fail open or fail closed

Lever operated with postition feedback

- Suitable for switch boxes or inductive F25 and F31 dual sensors

Valve automation

Ball Valves mostly are being used for open/close purposes. For modulating purposes an Econ® V-port ball valve is available. Due to the quarter turn construction Ball Valves are perfectly suitable for automated processes. A great advantage of the Econ® two-piece flanged Ball Valves is the standard Direct Mount top-flange according to ISO 5211, which enables direct mounting of an actuator - without mounting bracket and drive coupler on top of the valve. This results in a considerable cost saving, a compact automated unit and a higher level of safety for operators. If required, the use of a mounting bracket is still possible.

Double acting pneumatic actuator

- Compact
- Suitable for high duty cycles
- Fast opening and closing times
- Few moving parts: increases operational safety
- Modular design for easy mounting of accessories, like limit switches,
- (NAMUR) solenoid valves and bus communication systems
- Can be combined with emergency operation (manual gearbox)
- ISO 5211 mounting flange

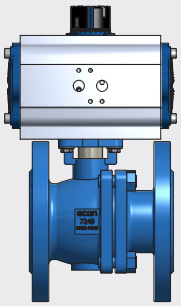

Single acting pneumatic actuator

- Compact
- Fail-safe function can easily be realized in spring closing or spring opening configuration
- Suitable for high duty cycles
- Fast opening and closing times
- Few moving parts: increases operational safety
- Modular design for easy mounting of accessories, like limit switches, (NAMUR)
- solenoid valves and bus communication systems
- Can be combined with emergency operation (manual gearbox)
- ISO 5211 mounting flange

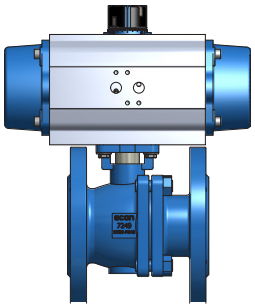

Electric actuator

- Compact
- Wide range of voltage options
- Slow opening and closing times prevent water hammering
- Noiseless
- Self-locking reduction gear
- Integrated limit switches for feedback signals
- Emergency handwheel operator
- ISO 5211 mounting flange
- Modulating actuator available for V-port Ball Valves
- IP68 version as an option
- EExd version as an option
- Modbus, CAN-open and Profibus fieldbus as an option
- Fail safe versions availabe. Fail safe by battery pack or spring load

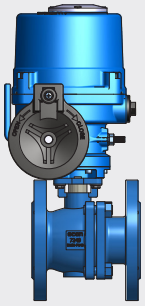

Hydraulic actuator

- Extremely compact
- Heavy duty
- High operational safety
- Modular design for easy mounting of accessories, like limit switches or visual open/close indication
- IP68 version as an option
- ISO 5211 mounting flange
- Electro-hydraulic version as an option
- CAN-open fieldbus as an option for the electro-hydraulic actuators

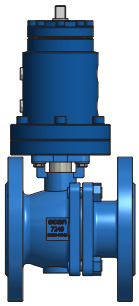

Econ® trunnion mounted ball valves

Trunnion Mounted ball valves complete the Econ® flanged ball valve range. These valves are being characterized by the supported (trunnion) ball and spring supported seats. This construction makes it possible to manufacture ball valves in large diameters that are suitable for both low and high pressure applications.

Econ® trunnion ball valve features:

- Available in steel, stainless steel and other steel alloys
- Sizes DN200 / 8" up to DN300 / 12"
- DIN PN10, PN16, PN25, PN40, ASME Class 150 and Class 300
- Full bore
- Fully bi-directional
- Provided with an anti-blow out stem
- Provided with an anti-static device
- The spring supported seats provide the valves with a reliable low pressure seal. They also provide a 100% seal on both sides of the ball, allowing the valves to be applied as a "Double Block and Bleed" valve.
- Fitted with an ISO 5211 Direct Mount Flange. (A mounting kit is therefore not required for mounting the actuator)
- Adjustable multi-sealing stem seal for a long life span
- Supplied with an EN 10204-3.1 certificate and optionally with a 3.2 certificate
- Optionally also available with injection points for injecting a sealant on the stem seal and seats, which allows temporary repair of a damaged seat or stem in a quick and effective manner

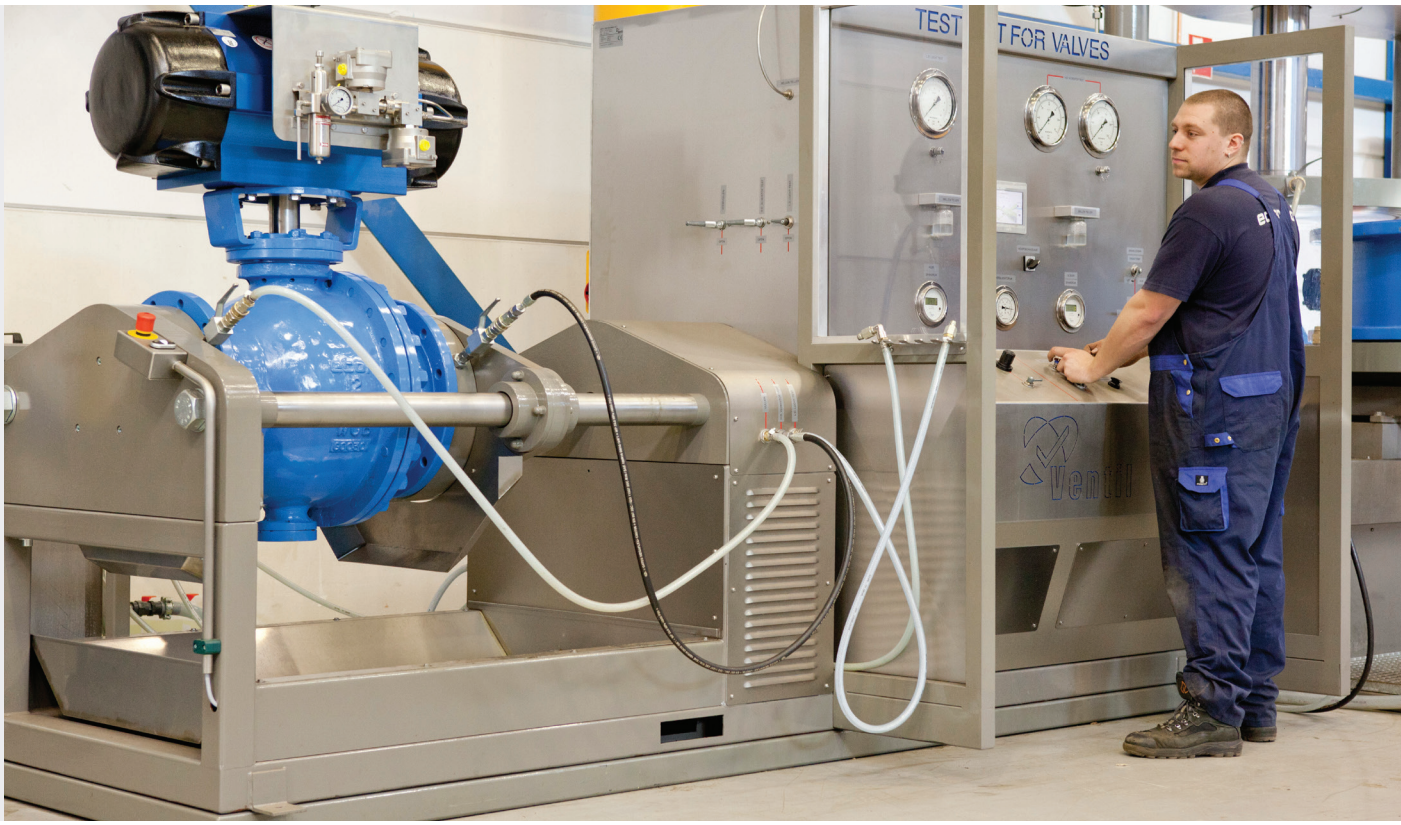

Econ®-CR (Chemical Resistant) Ball Valve

The Econ® flanged ball valve portfolio contains a special version for chemical applications. In many of these applications, graphite gasket particles are not allowed to contaminate the medium. The Econ® Chemical Resistant Ball Valve therefor has been equipped with a two layer PTFE/graphite stainless steel spiral wound body gasket. As a result of this construction the valve is still Fire Safe approved according to API 607 and ISO 10497.

The valve stem has a Kalrez® 6375 O-ring, which has an even better resistance than FKM and therefore is also resistant to media consisting of Amines and Ketones. The complete valve construction has been fugitive emission tested and complies with the requirements of TA-Luft/VDI 2440 - VDI 3479 and ISO 15848-1.

Finally, this valve is operated with a heavy duty moulded hand lever up to size DN80/3", larger sizes will have a robust T-bar lever. Pneumatic, electric and hydraulic actuators can be mounted directly to the valve without using brackets and couplers.

TA Luft

Kalrez®

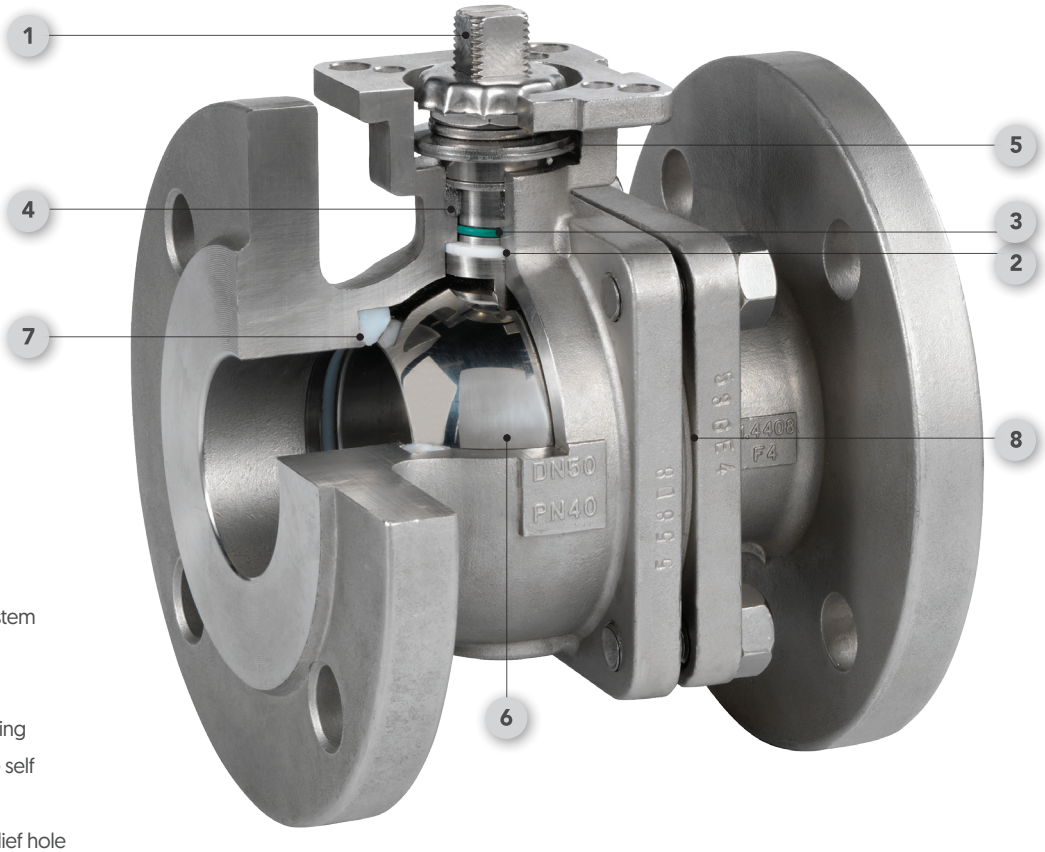

1 Direct mount top-flange and square stem
2 Primary PTFE stem seal/thrust washer
3 Secundary Kalrez® 6375 O-ring
4 Tertiary Fire Safe graphite gland packing
5 Belleville spring washers for a reliable self adjustable stem seal
6 Stainless steel solid ball with cavity relief hole and anti-static device
7 TFM 1600 seats
8 Stainless steel Fire Safe spiral wound body gasket with PTFE inner layers and Graphite outer layers

Kalrez® is a registered trademark of DuPont™

econ®

Ball valves | product overview

Econ® 1-piece reduced bore ball valve

Fig. 7744

Econ® 1-piece reduced bore ball valves have a BSP or NPT threaded connection.
These ball valves have an extremely compact design and do have competitive prices.

- **Pressure rating 1000 WOG (68 bar)**
- **Reduced bore**
- **Stainless steel 316 body, ball and stem**
- **PTFE**
- **Sizes 1/4" - 2"**
- **End-connection standards: ISO 228-1 BSPP or ASME B1.20.1 NPT**

Econ® 2-piece full bore ball valve

Fig. 7752, Fig. 7752ISO

These competitive priced Econ® 2-piece full bore ball valves have a BSP or NPT threaded connection and lockable lever.

- **Pressure rating 1000 WOG (68 bar)**
- **Full bore**
- **Stainless steel 316 body, ball and stem**
- **PTFE seats**
- **Sizes 1/4" - 3"**
- **ISO 5211 "Direct Mount" top flange (Fig. 7752ISO)**
- **End-connection standards: ISO 228-1 BSPP or ASME B1.20.1 NPT**

Econ® 3-piece full bore ball valve

Fig. 7446 (BSP), Fig. 7546 (NPT), Fig. 7646 (BW or SW)

This economy type Econ® 3-piece full bore ball valve is the most cost-effective choice for a hand operated 3-piece ball valve.

- **Pressure rating 1000 WOG (68 bar)**
- **Full bore**
- **Stainless steel 316 body, ball and stem**
- **PTFE seats**
- **Sizes 1/4" - 3"**
- **End-connection standards:**
  - **Threaded: ISO 228-1 BSPP or ASME B1.20.1 NPT**
  - **Butt weld: ASME B16.25-S40**
  - **Socket weld: ASME B16.1**

Econ® 3-piece full bore ball valve with ISO "Direct Mount" top flange

Fig. 7424 (CS BSP), Fig. 7524 (CS NPT), Fig. 7624 (CS BW or SW)

Fig. 7444 (SS BSP), Fig. 7544 (SS NPT), Fig. 7644 (SS BW or SW), Fig. 7621 (SS BW ISO 1127-1))

This type Econ® 3-piece full bore ball valve is equipped with a "Direct Mount" top flange according to ISO 5211 and a lockable lever.

- **Pressure rating 1000 WOG (68 bar)**
- **Full bore**
- **Stainless steel 316 body, ball and stem**
- **PTFE seats**
- **ISO 5211 "Direct Mount" top flange**
- **Sizes 1/4" - 4"**
- **End-connection standards:**
  - **Threaded: ISO 228-1 BSPP or ASME B1.20.1 NPT**
  - **Butt weld: ASME B16.25-S40**
  - **Socket weld: ASME B16.1**
  - **Butt weld ISO 1127-1 (400 WOG)**

Econ® 3-piece full bore ball valve for steam and condensate applications

Fig. 74441 (carbon steel), Fig. 74442 (stainless steel)

This Econ® 3-piece full bore ball valve with BSP threaded connections is specially designed for steam and condensate applications up to 14 bar and is equipped with a "Direct Mount" top flange according to ISO 5211 and a lockable lever.

- **Pressure rating 1000 WOG (68 bar)**
- **Full bore**
- **Stainless steel 316 or cast steel body**
- **PTFE (TFM 4215) seats**
- **ISO 5211 "Direct Mount" top flange**
- **Sizes 1/4" - 2"**
- **End-connection standards: ISO 228-1 BSPP**

Econ® Quick-Weld full bore ball valve with ISO “Direct Mount” top flange

Fig. 7611, Fig. 7641, Fig. 7654

The Econ® Quick-Weld full bore ball valve has rotatable welding connections, which save installation time up to 30%! The valve is also equipped with a “Direct Mount” top flange according to ISO 5211 and a lockable lever.

- **Pressure rating 1000 WOG (68 bar)**
- **Full bore**
- **Stainless steel 316 body, ball and stem**
- **PTFE (TFM 1600) and RPTFE (Fig. 7645) seats**
- **ISO 5211 “Direct Mount” top flange**
- **Sizes 1/4" - 3”**
- **End-connection standards:**
  - > **Fig. 7611: Orbital butt welding, EN 10357-A (DIN 11850-2) and EN 10357-D (Dutch dairy)**
  - > **Fig. 7641: Orbital butt welding, ISO 1127-1**
  - > **Fig. 7654: ASME B16.25-S40**

Econ® Premium 3-piece full or reduced bore ball valve with ISO top flange

Fig. 7422 (CS BSP), Fig. 7522 (CS NPT), Fig. 7622 (CS BW), Fig. 7722 (CS SW), Fig. 7442 (SS BSP), Fig. 7542 (SS NPT), Fig. 7642 (SS BW), Fig. 7742 (SS SW)

The Econ® Premium ball valve is a rugged 3-piece ball valve with BSP, NPT, Butt Weld or Socket Weld connections and can be supplied in stainless steel or cast steel in both full bore and reduced bore. The valve is equipped with a "Direct Mount" top-flange according to ISO 5211 and has a spring loaded lockable lever.

- **Pressure rating Class 600 (102 bar)**
- **Full or reduced bore**
- **Standard or Fire Safe approved versions**
- **Stainless steel 316 or cast steel body**
- **PTFE (TF 4103, TF 4215, TFM 1600) or PEEK seats**
- **ISO 5211 "Direct Mount" top flange**
- **Sizes**
  - > **Full bore 1/4" - 4"**
  - > **Reduced bore 3/4" - 4"**
  - > **Fire Safe full bore: 1/4" - 2"**
  - > **Fire Safe reduced bore: 3/4" - 2"**

Econ® wafer type full bore ball valve with ISO “Direct Mount” top flange

Fig. 7343 (CS) and Fig. 7383 (SS)

The Econ® wafer type ball valve with DIN flange connections can be supplied in stainless steel 316 or cast steel. These valves have a “Direct Mount” top flange according to ISO 5211 and a lockable lever.

- **Pressure rating PN16, PN40 and ASME Class 150**
- **Full bore**
- **Fire Safe approved**
- **Stainless steel 316 or cast steel body**
- **PTFE (TFM 1600) seats**
- **ISO 5211 “Direct Mount” top flange (ASME valves are non-Direct Mount)**
- **Sizes DN15 — DN150 and 1/2” - 4”**
- **Flange connection standard: EN 1092-1**

Econ® 2-piece full bore ball valve with flange connections and ISO “Direct Mount” top flange

Fig. 7249 (DIN CS), Fig. 7289 (DIN SS), Fig. 7248 (DIN long pattern CS), Fig. 7288 (DIN long pattern SS), Fig. 7245 (ANSI 150 CS), Fig. 7285 (ANSI 150 SS), Fig. 7257 (ANSI 300 CS), Fig. 7297 (ANSI 300 SS)

The Econ® 2-piece ball valve with DIN or ASME flanges can be supplied in stainless steel 316 or cast steel. These valves have a “Direct Mount” top flange according to ISO 5211 and a lockable lever up to size DN150/6”.

- **Pressure rating PN16, PN40, Class 150 and Class 300**
- **Full bore**
- **Fire Safe approved**
- **DIN valves available in short and long pattern**
- **Stainless steel 316 or cast steel body**
- **PTFE (TFM1600) seats**
- **ISO 5211 “Direct Mount” top flange**
- **Sizes DN15/½” - DN200/8”**
- **Flange connection standards:**
  - > **EN 1092-1**
  - > **ASME B16.5 RF**

Econ® 3-way ball valve with ISO "Direct Mount" top flange

Fig. 7281 (CS flanged), Fig. 7291 (SS flanged), Fig. 7760L-BSP, fig. 7760L-NPT, Fig 7760T-BSP, Fig. 7760T-NPT

The 3-way Econ® ball valves have a "Direct Mount" top flange according to ISO 5211 and a lockable lever. The "Direct Mount" top flange makes it easy to automate the valves at a very competitive price. These valves can be supplied with a L-, T- or X-bore and with flanged, BSP or NPT threaded connections.

Flanged valves

- **Pressure rating PN16, PN40 and Class 150**
- **PTFE (TFM 1600 or TFM 4215) seats**
- **Full bore**
- **ISO 5211 "Direct Mount" top flange**
- **Stainless steel 316 or cast steel body**
- **Sizes DN15 / 1/2" - DN100/4"**
- **Flange connection standards:**
  - > **EN 1092-1**
  - > **ASME B16.5 RF**

Threaded valves

- **Pressure rating 1000 WOG (68 bar)**
- **RPTFE seats and seals**
- **Reduced bore**
- **ISO 5211 "Direct Mount" top flange**
- **Stainless steel 316 body, ball and stem**
- **Sizes 1/4" - 2"**
- **Threaded connection standards: ISO 228-1 BSPP or ASME B1.20.1 NPT**

ERIKS
Flow Control

Visiting address
Cypresbaan 63
2908 LT Capelle aan den IJssel
The Netherlands

The Netherlands
T +31 88 855 81 00
E info.capelle@eriks.nl

Belgium
T +32 (0)3 829 28 20
E valves@eriks.be

France
T +33 (0)1 34 82 10 00
E eriks.valves@eriks.fr

Germany
T +49 2236 8916 301
E armaturen@eriks.de

United Kingdom
T +44 (0)116 272 7300
E efcleicester@eriks.co.uk

Follow ERIKS online:

www.eriks.nl/socialmedia

www.eriks.nl
shop.eriks.nl

Let's make industry work better

ERIKS